SECTION A-A (SCALE 4:1)

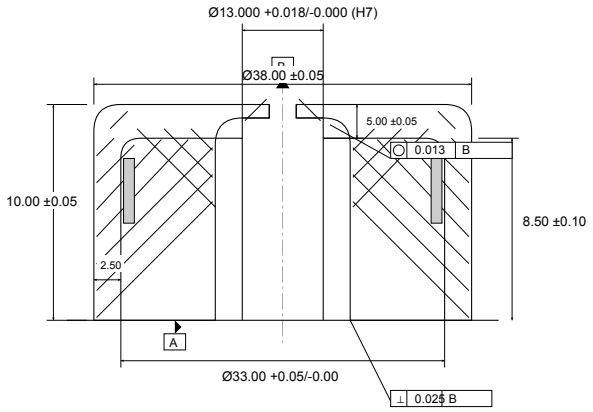

VIEW B - TOP (SCALE 3:1)

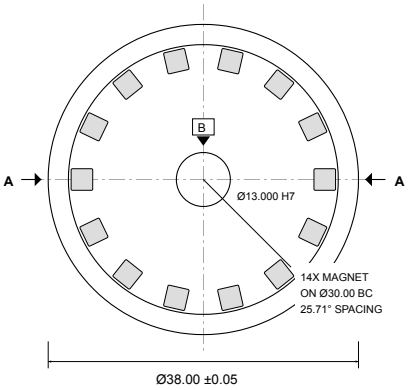

DETAIL C - BEARING POCKET (SCALE 8:1)

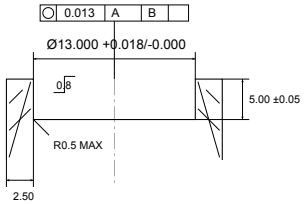

NOTES:

1. MATERIAL: 7075-T6 ALUMINUM PER AMS 4045
2. FINISH: TYPE III HARD ANODIZE PER MIL-A-8625
   BLACK, 0.001-0.002" THK
3. DEBURR ALL EDGES 0.005-0.015 BREAK
4. SURFACE FINISH: 63 µin Ra UNLESS NOTED
5. BEARING POCKET: 16 µin Ra OR BETTER
6. TOLERANCES UNLESS OTHERWISE SPECIFIED:
   .XX = ±0.01 | .XXX = ±0.005 | ANGLES = ±0.5°
7. INTERPRET PER ASME Y14.5-2018
8. DYNAMIC BALANCE: <0.05 g-mm RESIDUAL
9. MAGNET POCKETS: INTERFERENCE FIT FOR
   2.50mm THICK N52H MAGNETS
10. ALL INTERNAL CORNERS R0.5 MAX

REV	DESCRIPTION	DATE	APPROVED
A	INITIAL RELEASE	DEC 2025	JW

MODEL-F PROPULSION	
ROTOR BELL ASSEMBLY	MF-2814-BELL
MATERIAL: 7075-T6 ALUMINUM SCALE: 4:1	SHEET 1/1
FINISH: TYPE III ANODIZE, BLACK DWG: MF-2814-BELL-001	REV: A