This page contains the following errors:

```
error on line 270 at column 42: EntityRef: expecting ';'
```

Below is a rendering of the page up to the first error.

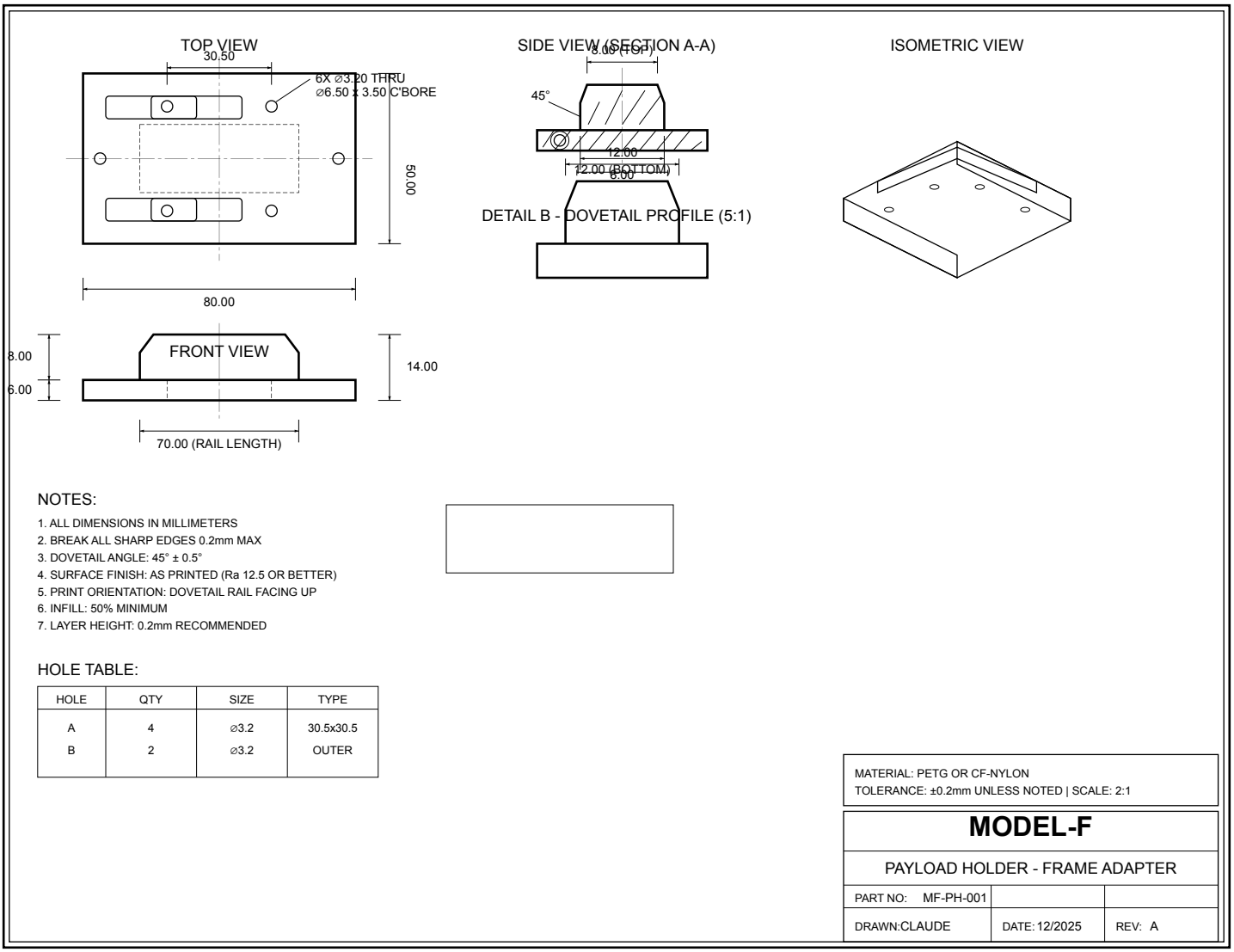

NOTES:

1. ALL DIMENSIONS IN MILLIMETERS
2. BREAK ALL SHARP EDGES 0.2mm MAX
3. DOVETAIL ANGLE: 45° ± 0.5°
4. SURFACE FINISH: AS PRINTED (Ra 12.5 OR BETTER)
5. PRINT ORIENTATION: DOVETAIL RAIL FACING UP
6. INFILL: 50% MINIMUM
7. LAYER HEIGHT: 0.2mm RECOMMENDED

HOLE TABLE:

HOLE	QTY	SIZE	TYPE
A	4	⌀3.2	30.5x30.5
B	2	⌀3.2	OUTER